CITY OF ABILENE
FRONT LOAD CONTAINER SPECIFICATIONS
BID #CB-1807

All containers to be built as per specifications. Each item shall be marked if Meets/Comply.

All containers shall be Delivered by April 30, 2018.

ITEM 1. 4 YARD FLAT TOP FRONT LOAD CONTAINERS		
ITEM	**DESCRIPTION**	**MEETS/COMPLY**
1.	FLOOR: 10 GAUGE	
2.	WALLS: 12 GAUGE	
3.	LIDS: PLASTIC	
4.	LIFT POCKET: 10 GAUGE 3 WAY FLARED	
5.	GUSSETS: 10 GAUGE FULL LENGTH SLEEVE	
6.	FLOOR SUPPORT: 3x3 CHANNELS FULLY ENCLOSED	
7.	WELDS: ALL INSIDE SEAMS ARE TO BE WELDED CONTINOUSLY, SKIP WELDS OUTSIDE	
8.	FINISH: PRIME INSIDE AND OUT WITH 1.5 MILS (DRY) OF RED OXIDE PRIMER. EXTERIOR FINISH COATED WITH 1.5 MILS (DRY) OF CONTAINER BROWN ALKYD ENAMEL.	

ITEM 2. 6 YARD SLANT TOP FRONT LOAD CONTAINERS		
ITEM	**DESCRIPTION**	**MEETS/COMPLY**
1.	FLOOR: 10 GAUGE	
2.	WALLS: 12 GAUGE	
3.	LIDS: PLASTIC	

4.	LIFT POCKET: 10 GAUGE 3 WAY FLARED	
5.	GUSSETS: 10 GAUGE FULL LENGTH SLEEVE	
6.	FLOOR SUPPORT: 3x3 CHANNELS FULLY ENCLOSED	
7.	WELDS: ALL INSIDE SEAMS ARE TO BE WELDED CONTINUOUSLY, SKIP WELDS OUTSIDE	
8.	FINISH: PRIME INSIDE AND OUT WITH 1.5 MILS (DRY) OF RED OXIDE PRIMER. EXTERIOR FINISH COATED WITH 1.5 MILS (DRY) OF CONTAINER BROWN LKYD ENAMEL.	

ITEM 3. 8 YARD HEAVY DUTY TALL FRONT LOAD CONTAINERS (Drawing Attached)		
ITEM	**DESCRIPTION**	**MEETS/COMPLY**
1.	FLOOR: 10 GAUGE	
2.	WALLS: 10 GAUGE	
3.	LIDS: PLASTIC	
4.	DOOR: 30x30 SLIDER	
5.	DOOR TRACK: 7 GAUGE	
6.	TOP CHANNEL: 10 GAUGE	
7.	LIFT POCKET: 10 GAUGE	
8.	GUSSETS: 10 GAUGE FULL LENGTH SLEEVE	
9.	BLUNDERBUSS: 7 GAUGE	
10.	LID BRACKETS: 7 GAUGE	
11.	FLOOR SUPPORT: 3x3 CHANNELS FULLY ENCLOSED	

12.	WELDS: ALL INSIDE SEAMS ARE TO BE WELDED CONTINUOUSLY, SKIP WELDS OUTSIDE	
13.	FINISH: PRIME INSIDE AND OUT WITH 1.5 MILS (DRY) OF RED OXIDE PRIMER. EXTERIOR FINISH COATED WITH 1.5 MILS (DRY) OF CONTAINER BROWN ALKYD ENAMEL.	

ITEM	DESCRIPTION	QTY	UNIT PRICE	EXTENSION
1.	4 YARD FLAT TOP FRONT LOAD CONTAINERS, AS PER SPECIFICATIONS CONTAINERS PER TRUCKLOAD: ESTIMATED SHIP DATE:	30		
2.	6 YARD SLANT TOP FRONT LOAD CONTAINERS, AS PER SPECIFICATIONS CONTAINERS PER TRUCKLOAD: ESTIMATED SHIP DATE:	11		
3.	8 YARD HEAVY DUTY TALL FRONT LOAD CONTAINERS, AS PER SPECIFICATIONS CONTAINERS PER TRUCKLOAD: ESTIMATED SHIP DATE:	27		

_____
Company Name

_____
Authorized Representative Signature

_____
Email

_____
Phone Number

8-YARD FLAT

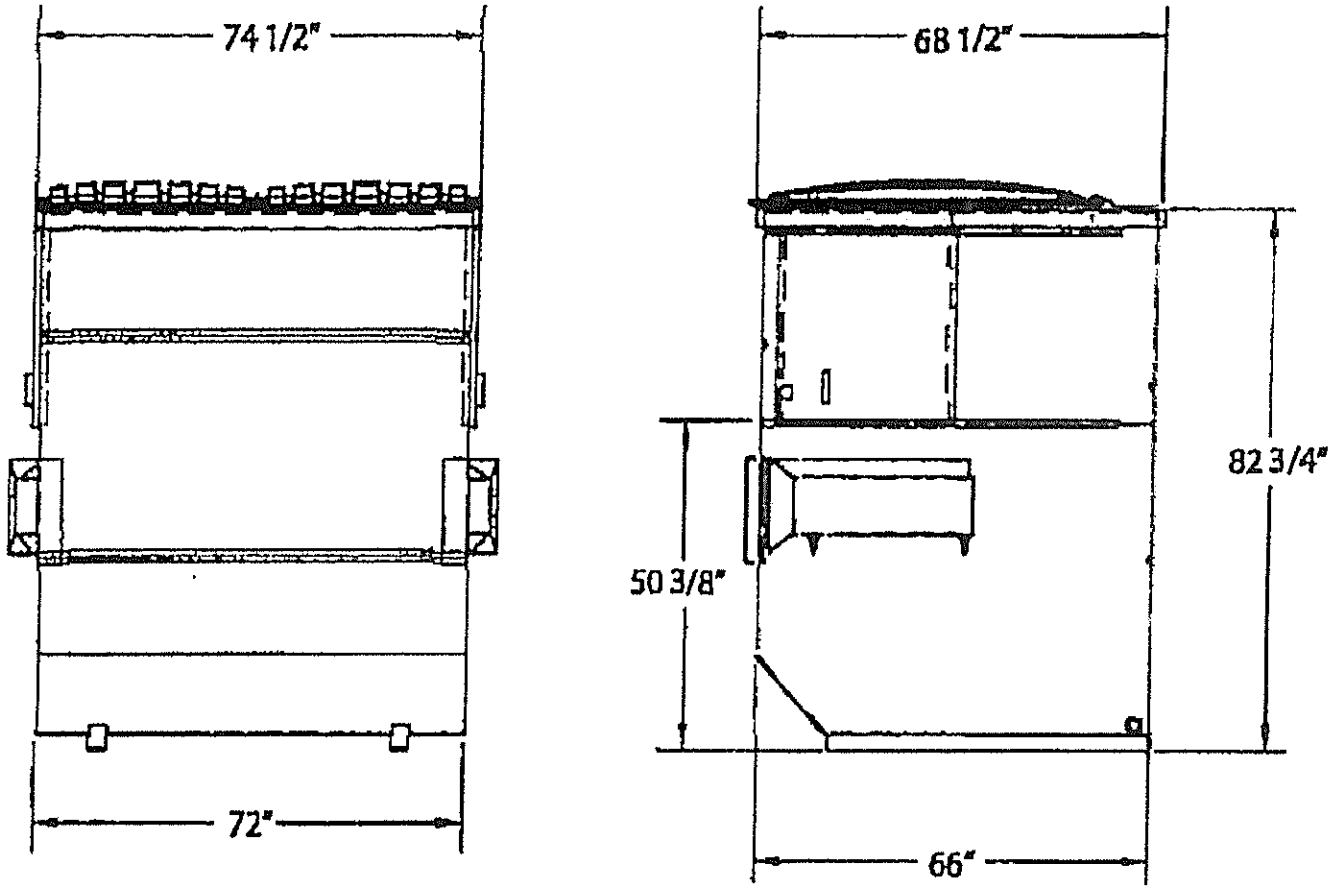

SLOPE MUST BE ON BOTTOM

Tuesday, Jun 20, 2017 01:43 PM